Edison
robotics for everyone

EdBuild

Let's build the EdRoboClaw

The EdRoboClaw EdBuild by Microbric Education is licensed under a Creative Commons Attribution-ShareAlike 4.0 International License.

EdBuild – the EdRoboClaw

The EdRoboClaw is a remote-controlled articulated robotic arm, which can be programmed using the barcodes in this guide and controlled with a standard TV or DVD remote control. You will be able to drive the EdRoboClaw forwards, backwards and spin it right or left. You will also be able to open and close the claw to pick up and carry an object, such as one of the EdCreate beams.

Build difficulty rating

The EdRoboClaw is rated a level 3 build.

Difficulty rating	Recommended age	Programming skills needed
1	8+	- Barcodes and remote control
2	8+	- Barcodes and remote control
3	8+	- Barcodes and remote control
4	10+	- Barcodes and remote control ***AND*** - EdWare ***OR*** - EdPy
5	12+	- EdPy

To successfully complete and operate a build, you will need an understanding of the programming skills listed.

Learn more about programming with Edison at:

- **Barcodes:** Appropriate for ages 4+. No prior experience with programming or robotics is assumed or required. www.meetedison.com/robot-activities/youre-a-controller/
- **EdWare:** Best suited to students aged 11 to 13. A basic understanding of programming fundamentals may be helpful. www.meetedison.com/robot-programming-software/edware/
- **EdPy:** Best suited to students aged 13 to 16 years old. A basic understanding of programming fundamentals may be helpful. www.meetedison.com/robot-programming-software/edpy/

Get set up

Before you begin this build, check that you have everything you need and that you can do the programming required. It's also a good idea to get familiar with how to build with your Edison robot.

What you need

To make the EdRoboClaw, you will need:

- 2 Edison robots
- 1 EdCreate – Edison robot creator's kit
- 1 TV or DVD remote
- 1 print-out of the 'Bottom Edison' barcodes sheet (from in this guide)
- 1 print-out of the 'Top Edison' barcodes sheet (from in this guide)

Programming required in this build

To program the EdRoboClaw, you will need to program a remote control with six different commands using the barcodes in this guide.

Building with Edison

You can build with Edison using an EdCreate creator's kit or any other LEGO brick compatible building system.

Bricks can be attached to the top and bottom of your Edison robot. Pegs can be attached on the sides of Edison. When Edison's wheels are removed, cross axles can be used in the powered sockets.

There are three types of holes on the side of Edison: pin holes, stud holes, and cross axle sockets. Look at the following images to learn more about how to connect and build with Edison.

Edison's side and top connections

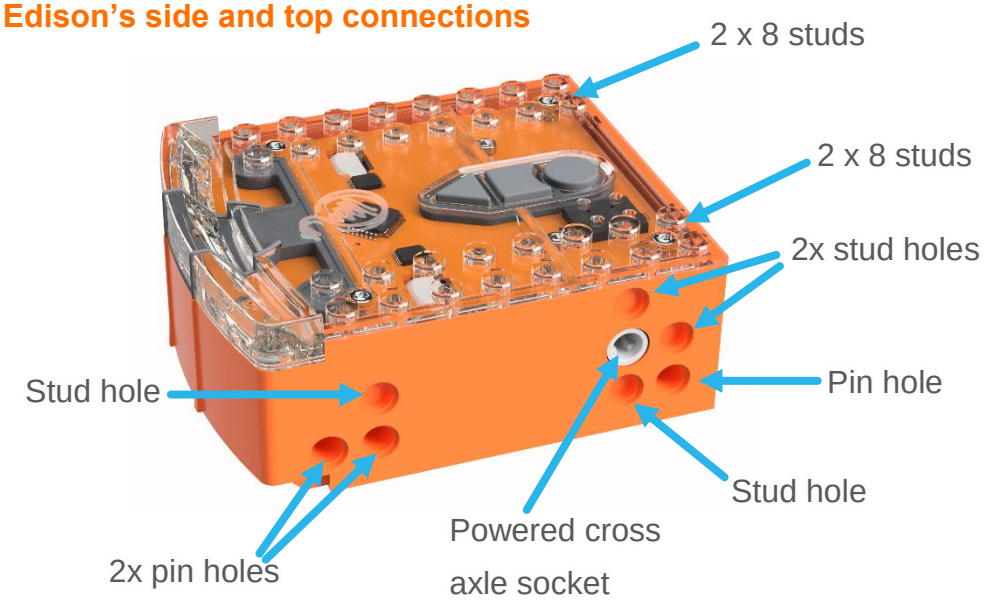

Hole type	Description	Connects to
Pin hole	A full-depth hole for connecting pegs.	
Stud hole	A hole of normal stud-depth which works with half pegs.	
Cross axle socket	A powered socket which rotates.	

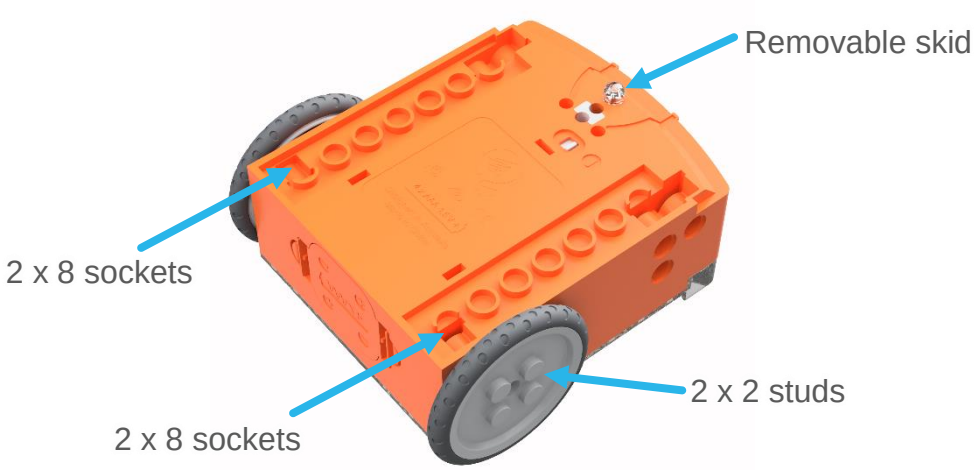

Edison's bottom and wheel connections

Let’s build the EdRoboClaw!

The EdRoboClaw is a remote-controlled robotic arm with a moving base that you can drive around. The robotic arm of the EdRoboClaw can open and close to pick up and carry objects such as the grey 7-hole long beam from the EdCreate kit.

This is what the finished EdRoboClaw looks like:

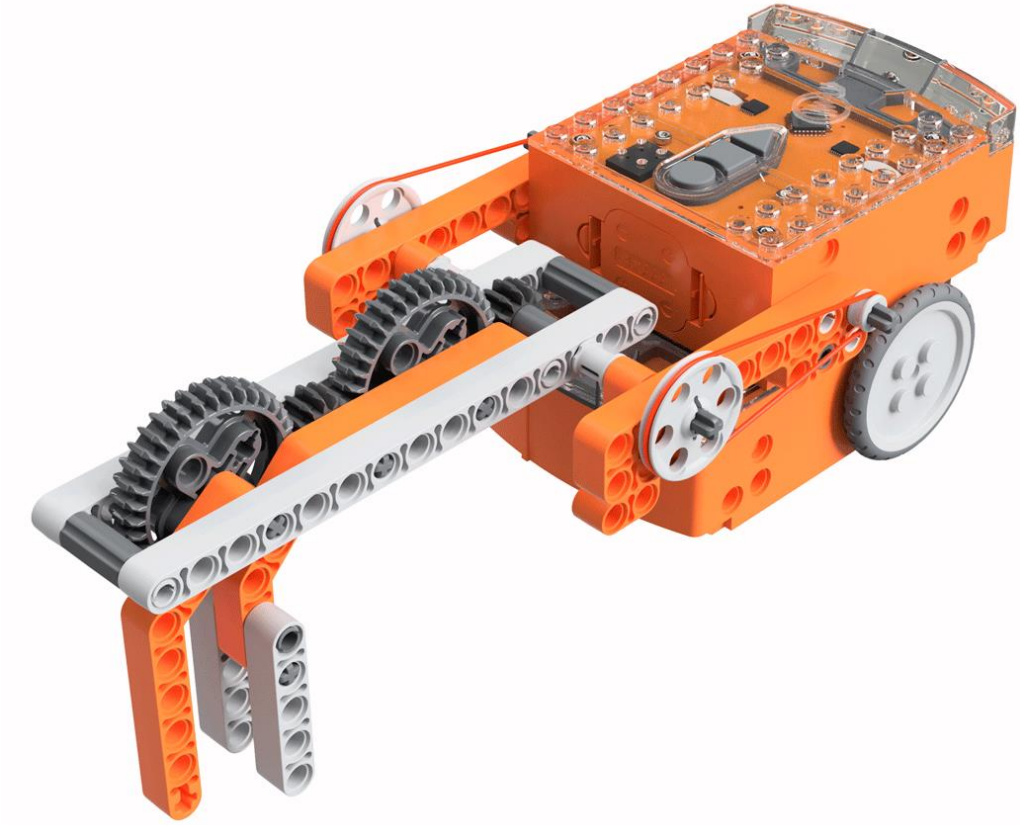

Step 1: Program Edison

Before you begin building with the EdCreate parts, you will need to program the remote-control codes into both Edison robots.

The next two pages have the remote-control barcodes for the bottom and top Edison robots. Print out these pages so you can drive your Edison robots over the barcodes.

Print out this page!

Bottom Edison – barcodes

The bottom Edison is the driving Edison.

Program the driving Edison

The driving Edison will control the movement of the EdRoboClaw (forwards, backwards, spin left and spin right). Drive this Edison over the following barcodes, programming each to a button that corresponds well with the driving manoeuvre on the remote control. Don't use buttons that you want to use to control the robotic claw.

Reading the barcode

1. Place Edison facing the barcode on the right side
2. Press the record (round) button 3 times
3. Edison will drive forward and scan the barcode
4. Press a button on your TV/DVD remote that you want to activate that function

Barcode – IR learn drive forward

Barcode – IR learn drive backward

Barcode – IR learn spin left

Barcode – IR learn spin right

Print out this page!

Top Edison – barcodes

The top Edison controls the robotic claw arm.

You may want to mark the Edison robots so you don't confuse which one is programmed to be the bottom robot and which one is programmed to be the top one while you are building. You can mark one of the Edison's as the 'top' robot by using a spare brick or a piece of tape to indicate it is the top Edison. You can also take the wheels off the top robot as soon as you finish programming this Edison so you won't get confused!

Program the claw arm Edison

The claw arm Edison will control the articulated robotic arm. Drive this Edison over the following barcodes, programming each to a button that corresponds well with the open or close manoeuvre on the remote control. Don't use buttons that you used to control how the EdRoboClaw drives.

Reading the barcode

1. Place Edison facing the barcode on the right side
2. Press the record (round) button 3 times
3. Edison will drive forward and scan the barcode
4. Press a button on your TV/DVD remote that you want to activate that function

Barcode – IR learn Claw Arm close claw and pick up

Barcode – IR learn Claw Arm drop down and open claw

Suggested remote control button setup for the EdRoboClaw

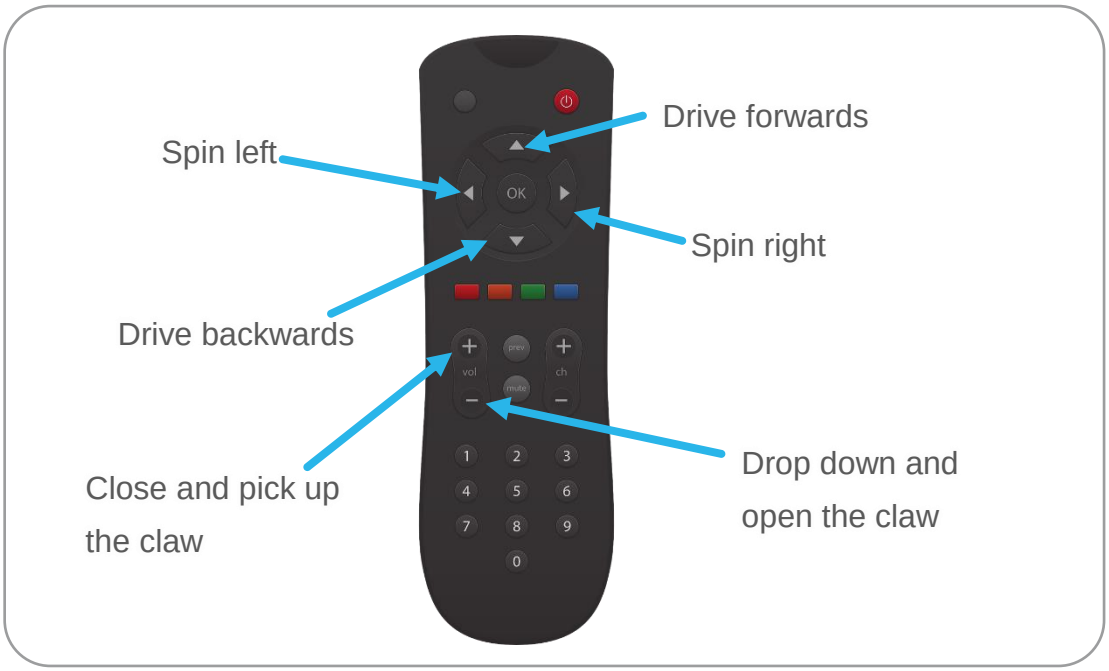

Step 2: Assemble the EdRoboClaw

Follow the illustrations step by step to build the EdRoboClaw.

Reading the instructions:

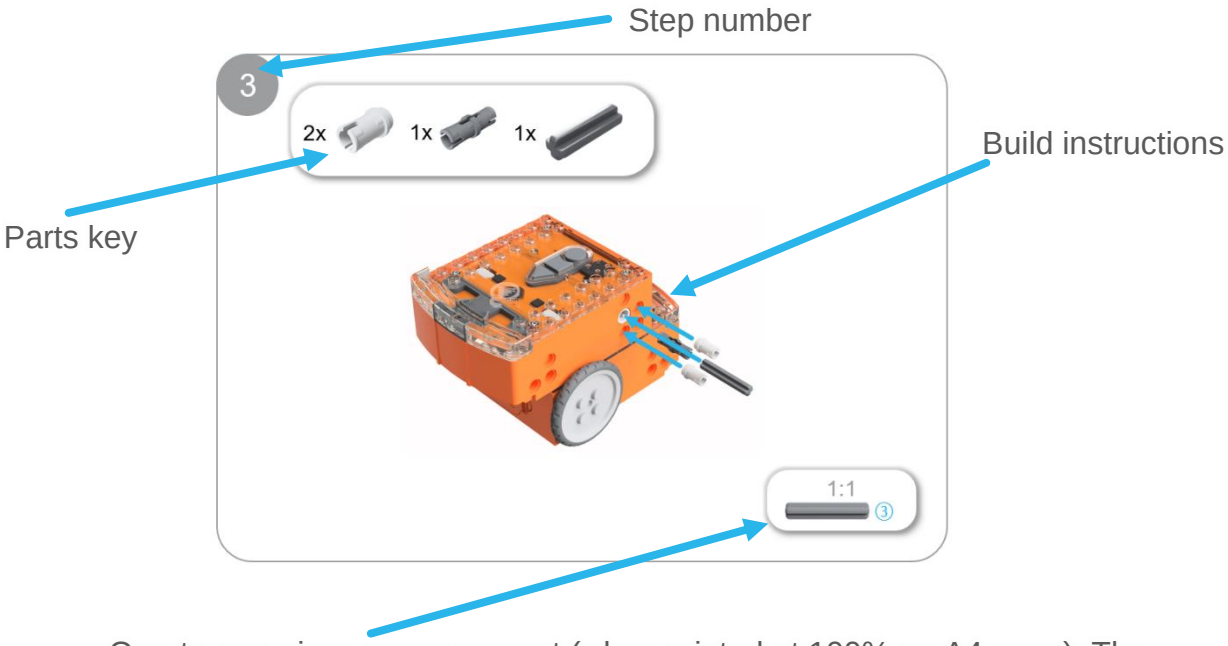

One-to-one piece measurement (when printed at 100% on A4 page). The number in the circle indicates the part's length in number of studs.

1

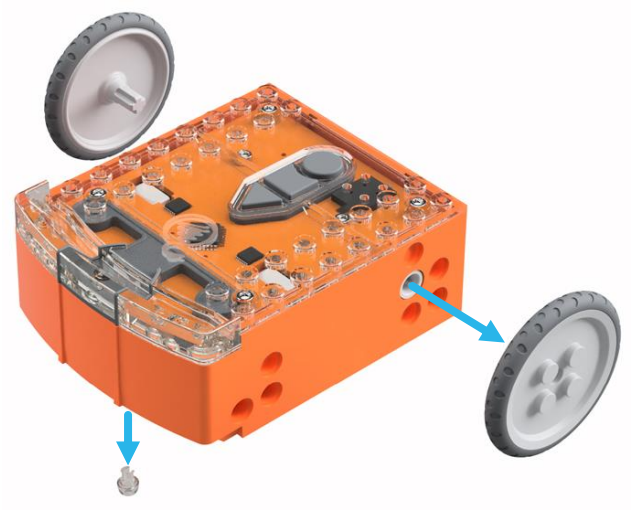

2

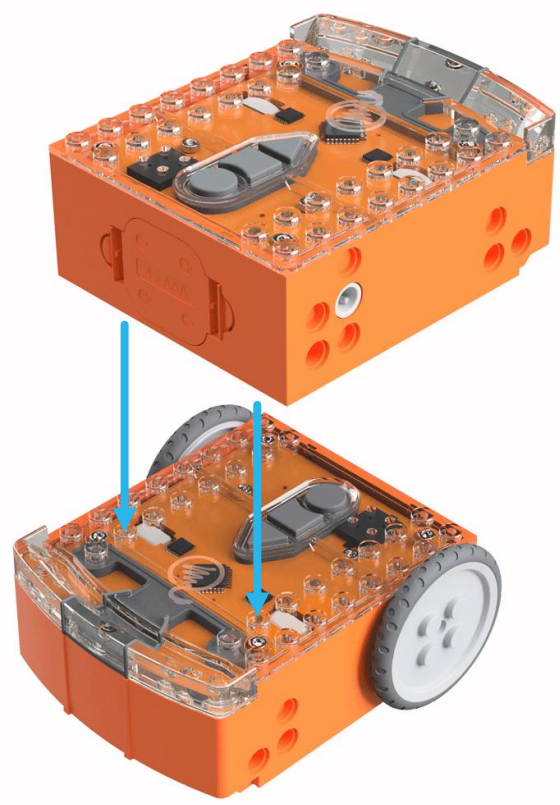

3

2x 1x 1x 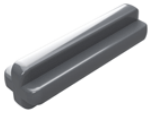

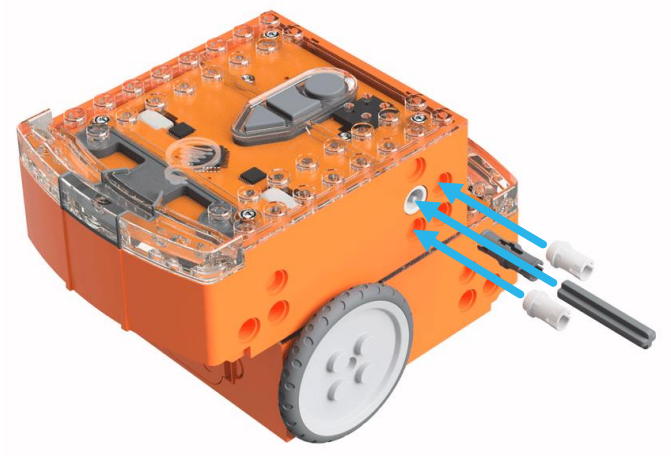

1:1

③

4

1x 1x 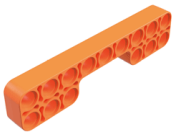 1x 1x

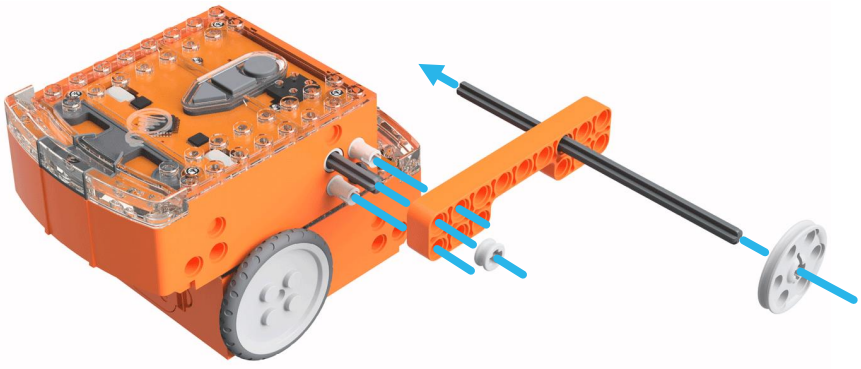

1:1

⑫

5

2x x1 x1

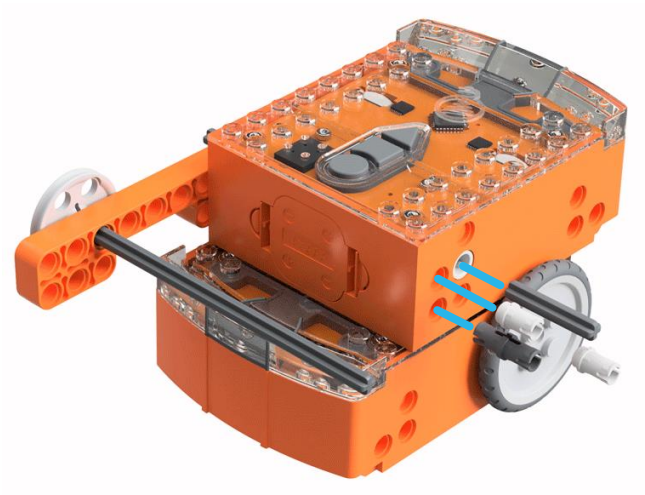

1:1 ③

6

1x 1x

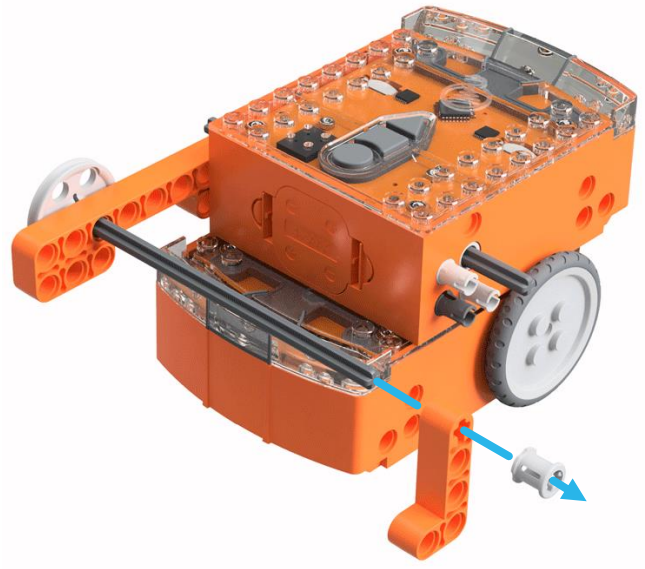

7

1x 2x 1x

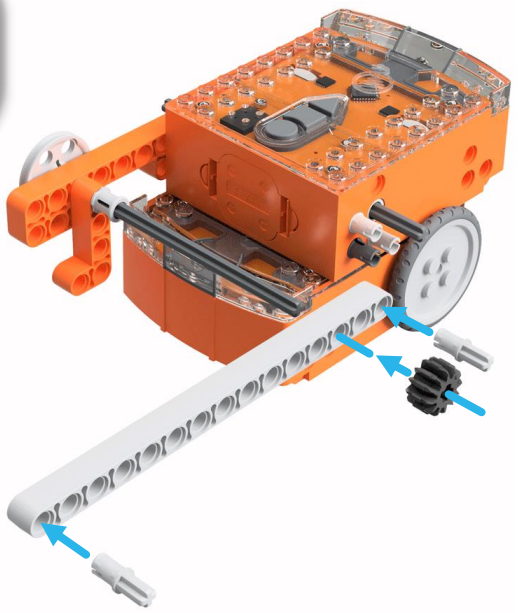

1:1

15

8

2x 1x 3x 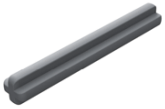

1:1

4

9

1x 1x 1x

10

3x 2x 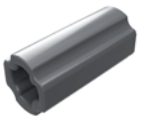

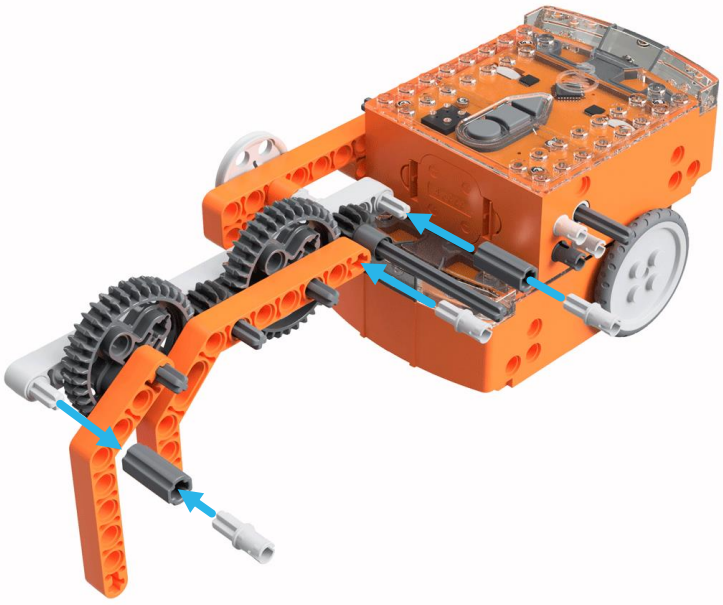

11

1x 1x 1x

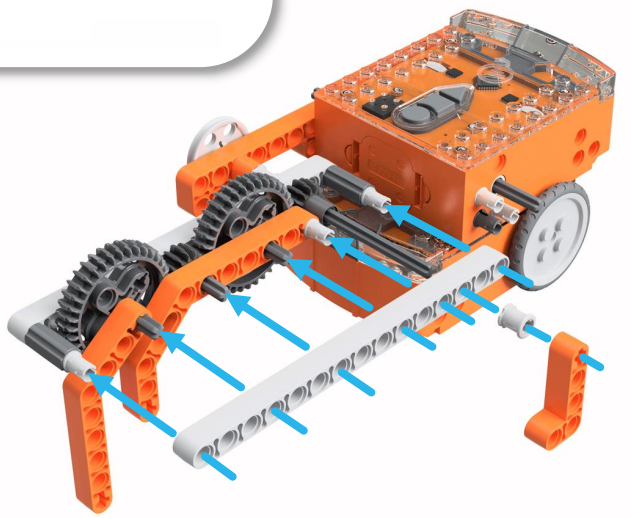

1:1

⑮

12

1x 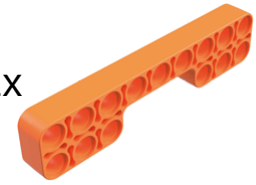 1x 1x

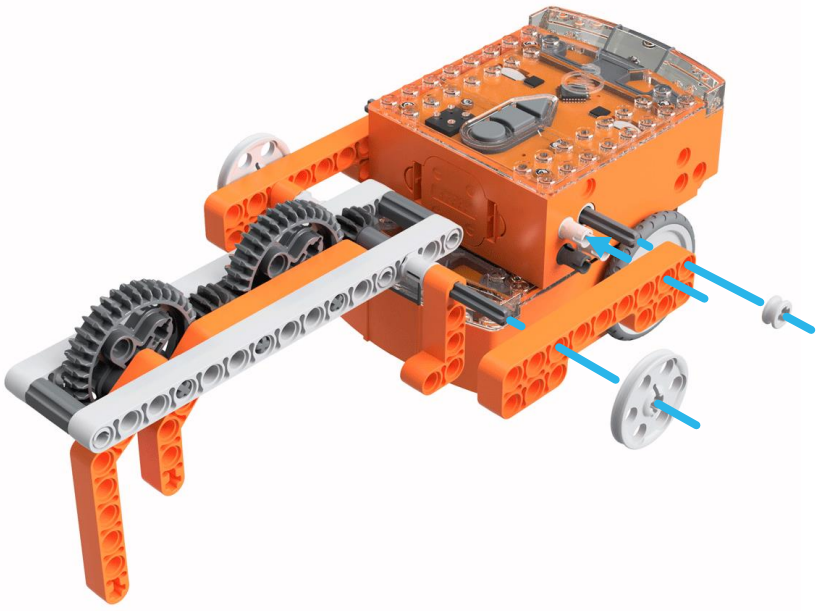

13

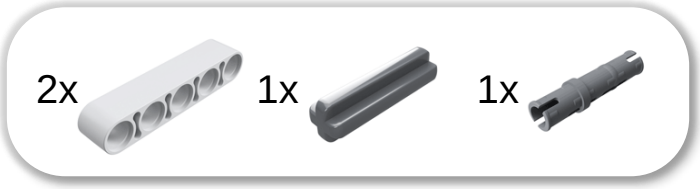

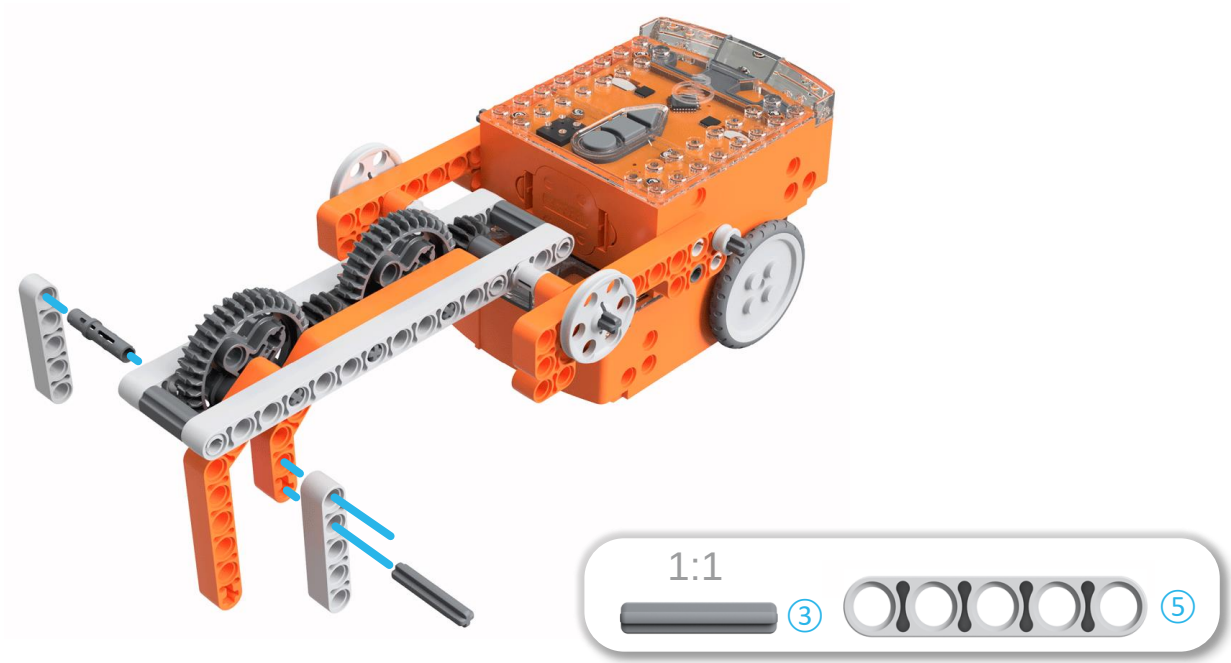

14

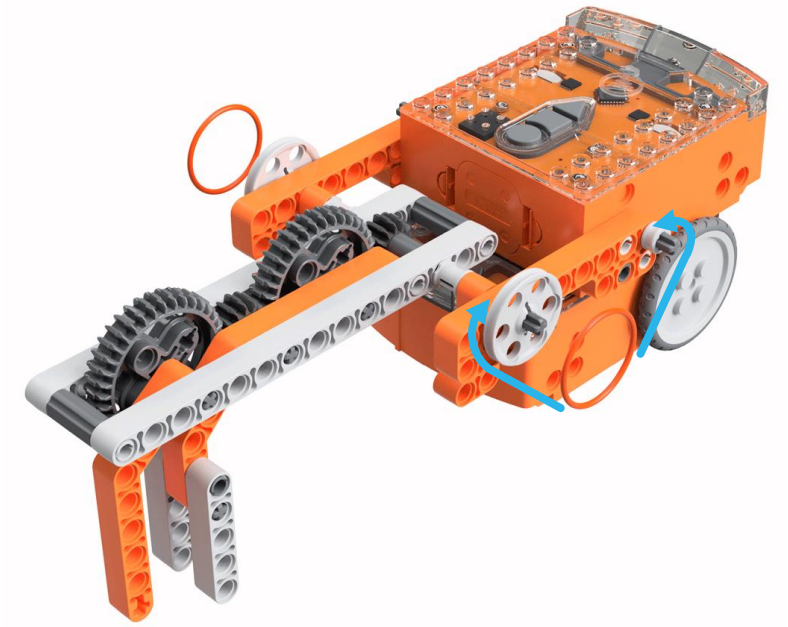
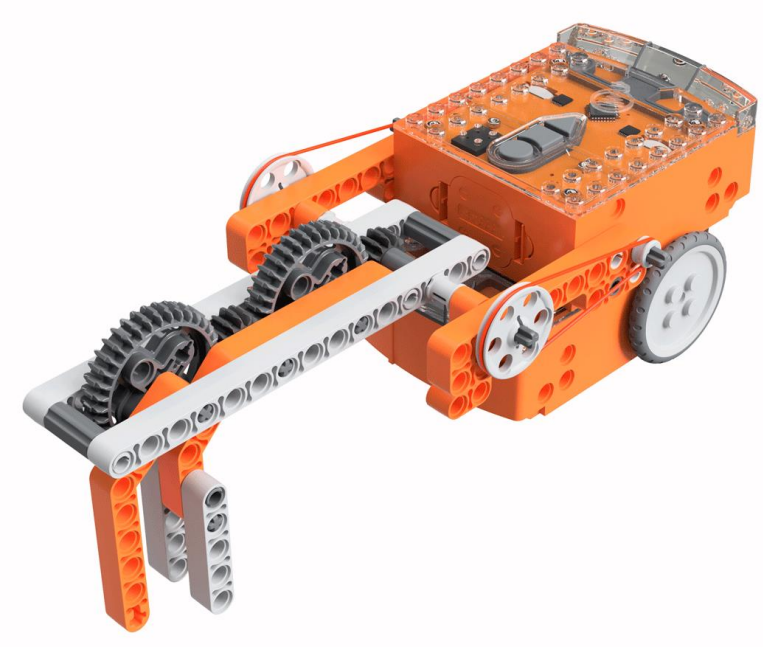
15